930H

Wheel Loader

CATERPILLAR®

Cat® C6.6 Engine with ACERT™ Technology		
Net power (SAE J1249)	111 kW	149 hp
EPA Tier 3, EU Stage III Compliant		
Weight		
Operating weight	13 029 kg	28,725 lb
Buckets		
Bucket capacity	2.1-5.0 m^3	2.6-6.5 yd^3

930H Features

Loader Linkage

Cat exclusive VersaLink™ Loader Linkage delivers strength and versatility to help you do more tasks, faster. The high lift linkage option takes you places others can't reach.

High Performance Power Train

Clean, quiet operation with superior power.

Powerful Hydraulic System

System senses work demand and adjusts flow and pressure to match for precise, efficient control.

Comfortable Cab

Large, spacious cab and low-effort, ergonomic joystick controls let you concentrate on your work.

Work Tools

Make your 930H the most versatile machine on the jobsite with Caterpillar's broad range of work tools.

Contents

VersaLink Loader Linkage 3
Power Train 4
Hydraulics 5
Operator Station 6
Work Tools 7
Serviceability 8
Customer Support 8
Specifications 9
Standard and Optional Equipment 17

The Cat® 930H Wheel Loader leads the industry in operator comfort, performance and versatility. Size, power, performance and work tool interchangeability make this machine ideal for a wide range of jobs. Fast cycle times help you move more material. Large spacious cab with joystick control keeps you comfortable throughout the work day, allowing you to get more done. Loader design delivers strength and durability with superior control and unmatched versatility. Discover how much more you can get done with the new 930H.

VersaLink™ Loader Linkage

Loader design delivers unmatched versatility.

Linkage Design

The Cat exclusive VersaLink™ design provides toolcarrier controllability, versatility and parallel lift with the strength, durability and speed of Z-Bar linkage. The 930H can be configured in several ways:

- Equipped with a Quick Coupler for quick and easy work tool changes for optimum utility and versatility.
- Equipped with pin-on work tools, such as a bucket, for a dedicated wheel loader application with exceptional breakout force, tipping load and dump height.
- Equipped with the High Lift VersaLink loader linkage option for special applications that require more reach and lift height.

Loader Performance

The VersaLink loader linkage is designed for exceptional loader performance in a wide range of applications, offering:

- Simultaneous tilt, lift and auxiliary hydraulics function for precise control of the work tool.
- Increased breakout force to shorten cycle times and increase bucket fill factors.
- Higher dump clearance for working in “high target” situations that ordinary loaders cannot.
- More dig depth for better excavation performance, even when equipped with larger tires.
- Greater rackback angle for improved material retention, resulting in higher productivity.
- Greater dozing angle for improved control of material when fine grading.

Parallel Lift

Parallel lift simplifies working with palletized or stacked material. Operators can concentrate on material placement while the load automatically remains parallel throughout the lift range. And, like a toolcarrier, the 930H can easily manipulate loads at all heights.

High Lift Version

Special applications call for special equipment. The optional High Lift VersaLink loader linkage provides an additional clearance of 483 mm (19 in) and is ideal for jobs that require higher lift of lighter materials. The high lift VersaLink is available in both pin-on and quick coupler versions.

Power Train

Delivers maximum rimpull to the ground and full power to loader hydraulics.

Cat Engine

The Cat C6.6 engine provides cleaner, quieter operation while delivering superior performance and durability. The 111 kW (149 hp) rated net power engine meets all worldwide emissions standards and features: flatter power curve for outstanding response in the working RPM range (1,900 to 2,300), noise reduction technologies for up to 5 dB reduction, and patented ACERT™ Technology combined with common rail fuel system, smart waste gate turbocharger and crossflow head design for reduced emissions.

Cat Axles

Heavy-duty axles feature hardened gears and bearings for durable performance. Rear axle oscillates up to 12 degrees to help assure four-wheel ground contact for optimum traction and stability. Optional front and rear Limited Slip Differentials enable outstanding traction in poor underfoot conditions.

Cat Transmission

Rugged Cat transmission uses heavy-duty components for durable and reliable operation. The operator can choose between manual shift and two autoshift modes, Performance or Economy. Performance mode provides maximum acceleration while the economy mode increases fuel economy and improves operator comfort.

Hydraulics

Modular system provides high efficiency with low effort, precise control.

Load-Sensing Hydraulics

Modular hydraulic system delivers precise control with low effort operation. This load-sensing, variable flow system senses work demand and adjusts flow and pressure to match. This allows full hydraulic forces at any engine speed for delicate jobs in tight areas. Combined with the VersaLink linkage, the hydraulic system allows simultaneous lift, tilt and auxiliary hydraulic function.

Auxiliary Hydraulics

Auxiliary hydraulics provide unparalleled versatility allowing you to select the configuration that best suits your application. Third function only or packaged with fourth enables the use of almost all work tools. Fifth and sixth function hydraulics are also available for responsive independent positioning of work tools with multiple hydraulic cylinders such as snow plows with hydraulically movable snow wings.

Optional Joystick with Integrated Third Function Controls

An optional joystick combines lift and tilt functions with transmission controls and third function auxiliary hydraulic controls in one ergonomic joystick. This allows the operator to maintain control of the load linkage while operating hydromechanical tools. The system can operate in two modes: the Work Tool and Continuous Flow mode, which allows bi-directional flow to be controlled with a thumbwheel, and the Continuous Flow mode, which provides infinitely variable flow to tools with hydraulic motors.

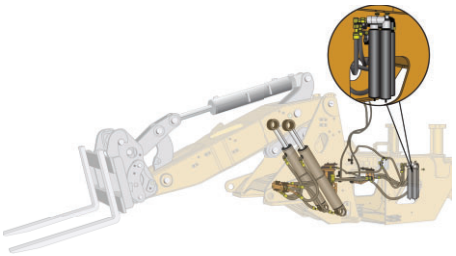

Ride Control System

The optional Ride Control System provides a comfortable ride and excellent material retention.

Four nitrogen charged accumulators set to different pressures enable optimum cushioning over uneven terrain for all loads and speeds.

The system operates in Automatic; as the loader ground speed exceeds 5 km/h (3 mph) the system will activate, below 5 km/h (3 mph) the system is off, providing maximum lift power.

Operator Station

Superior comfort keeps you productive, all day long.

Experience comfort and convenience in the H-Series cab. The spacious interior and ergonomic controls keep you comfortable throughout the work day. Choose the seat that meets your needs – the standard, fully adjustable seat or the optional Cat Contour seat for added adjustment and air suspension. The two-door design lets you enter and exit from either side of the machine and wide, serrated steps provide stable footing. Both doors lock open 180 degrees and feature sliding glass windows for better communication with workers on the ground. Large flat glass windows provide excellent visibility all around the machine. The rear window features a standard electric defroster.

Controls

Low effort, ergonomic joystick controls provide easy operation of lift and tilt functions. The standard joystick features an integrated directional control switch for added convenience. The operator programmable transmission neutralizer can be set in seconds optimizing brake effort for all applications.

Instrument Panel

The sealed instrument panel with easy to read white faced gauges and indicators keeps the operator informed of system conditions. The large LED readout provides ground speed and other critical information.

Optional Rear View Camera

This work area visual enhancement system uses a closed circuit video monitoring system. Up to three cameras can be mounted on the machine frame. Objects can be viewed on a color LCD monitor in the cab.

Optional Dual Mode Steering

The operator can select traditional steering or QuickSteer mode for faster, low effort truck loading. QuickSteer requires only 50 degrees steering wheel deflection for full articulation drastically reducing operator effort.

Work Tools

Do more jobs with one machine with Cat Work Tools.

The Right Tool for the Job

The wide variety of work tools offered by Caterpillar makes the 930H one of the most versatile machines on the jobsite. Work tools can be changed quickly and easily with the machine's quick coupler system. A switch in the cab activates a hydraulic cylinder for positive tool engagement and disengagement.

Bucket Work

With exceptional rimpull and high breakout and lift forces, the 930H delivers strong performance as a bucket loading machine. A wide range of Cat buckets are available including:

- General purpose – 2.1 m^3 (2.75 yd^3), 2.3 m^3 (3.0 yd^3) and 2.5 m^3 (3.25 yd^3)
- Penetration
- Light material
- Multi purpose
- Side dump
- High dump
- Wood chip
- Top clamp

Material Handling

The exceptional visibility and heavy-lift capabilities of the 930H let you work quickly and efficiently in material handling applications. A wide range of tools are available:

- Standard width carriage with pallet forks – 1220 mm (48 in), 1370 mm (53 in) and 1524 mm (60 in)
- 2440 mm (96 in) wide carriage with 1830 mm (72 in) or 1524 mm (60 in) tines
- Offset forks for improved tip visibility
- Material handling arm
- Log and lumber forks with a variety of top clamp choices

Special Applications

Caterpillar also offers other work tools designed to meet specific job requirements:

- Dozer blades
- Snow plows
- Hydraulic brooms
- Asphalt cutter
- Loader rakes

Work tool availability varies by region.

Serviceability

Easy access and minimal maintenance requirements keep your machine on the job.

Convenient service features make maintenance easy.
All service points are accessible from ground level on the right side of the engine. Gull-wing doors with gas struts lift for exceptional access to filters and service points. Extended service intervals reduce service time and increase machine availability.

- Sight gauges let you easily check radiator coolant, hydraulic oil and transmission oil levels as well as engine air filter restriction without opening the air cleaner.
- Standard pressure taps allow quick diagnosis of the entire hydraulic system.
- S•O•S℠ ports make oil sampling quicker, cleaner and provide the best oil sample for analysis.
- Spin-on filters for engine oil, transmission oil and hydraulic oil are vertically mounted for easier servicing.
- 930H features a standard electronic fuel prime pump.
- Sequentially placed radiator and oil coolers are easy to access.
- Swing-out cooling fan allows quick and easy cleaning and servicing of the radiator. The fan is hydraulically driven and separate from the engine compartment for low noise operation.
- Optional reversing fan cleans screens without interrupting machine operation.

Customer Support

Unmatched support makes the difference

Your Cat dealer is ready to assist you with your purchase decision and everything after.

- Make comparisons of machines, with estimates of component life, preventative maintenance and cost of production.
- Financing packages are flexible to meet your needs.
- Your Cat dealer can evaluate the cost to repair, rebuild and replace your machine, so you can make the right choice.
- For more information on Cat products, dealer services and industry solutions, visit us at www.cat.com.

Engine

Rated net power @ 2,300 rpm	111 kW	149 hp
Model	Cat® C6.6	
SAE J1349	111 kW	149 hp
ISO 9249 (1997)	112 kW	150 hp
EEC 80/1269	112 kW	150 hp
Max. net power @ 2,000 rpm	119 kW	160 hp
SAE J1349	119 kW	160 hp
ISO 9249 (1997)	120 kW	161 hp
EEC 80/1269	120 kW	161 hp
Bore	105 mm	4.13 in
Stroke	127 mm	5 in
Displacement	6.6 L	403 in^3
Net torque	727 N·m	536 ft-lb
Peak torque	742 N·m	547 ft-lb

- Net Power ratings are tested at the reference conditions for the specified standard.
- Net power shown is the power available at the flywheel when the engine is equipped with alternator, air cleaner, muffler and fan at minimum speed.
- No derating required up to 3000 m (9,843 ft) altitude. Auto derate protects hydraulic and transmission systems.
- When the fan is at maximum speed, Rated Net Power is 97 kW (130 hp) and Maximum Net Power is 106 kW (142 hp) at the flywheel per the SAE reference conditions.
- The Caterpillar® C6.6 engine meets Tier 3 off-highway emission regulations.

Buckets

Bucket capacities	2.1 m^3-5.0 m^3	2.6 yd^3-6.5 yd^3

Weights

Operating weight	13 029 kg	28,725 lb

- Specifications shown are for 930H with optional counterweight, standard lubricants, full fuel tank, deluxe cab, Limited Slip rear axle with heavy duty brakes, additional guarding, 2.1 m^3 (2.6 yd^3) bucket with bolt-on cutting edge, 80 kg (176 lb) operator and 20.5 R25 radial (L-3) XHA tires.

Steering

Steering articulation	40°	40°
Minimum turning radius (over tire)	5257 mm	207 in
Steering angle, each direction	40°	40°
Steering cylinders, two, bore	70 mm	2.75 in
Hydraulic output at 2,300 engine rpm and 6900 kPa (1,000 psi)	70 L/min	17.6 gal/min
Maximum working pressure	24 130 kPa	3,500 psi

Loader Hydraulic System

Output at 2,300 engine rpm and 6900 kPa (1,000 psi) with SAE 10W oil at 65° C (150° F)	220 L/min	58 gal/min
Hydraulic cycle time	9.5 Seconds	
Pump flow – implement pump	220 L/min	58 gal/min
Relief pressure – implement pump	258.9 bar	3,755 psi
Maximum working pressure	25 900 kPa	3,755 psi
Hydraulic cycle time	9.5 Seconds	
Raise	5 Seconds	
Dump	1.7 Seconds	
Lower, empty, float down	2.8 Seconds	
Total	9.5 Seconds	
Lift cylinders, double acting:		
Bore	114.3 mm	4.5 in
Stroke	777 mm	30.6 in
Tilt cylinder, double acting:		
Bore	152.4 mm	6 in
Stroke	939 mm	37 in

Service Refill Capacities

Fuel tank	225 L	59.4 gal
Cooling system	40 L	10.6 gal
Crankcase	15 L	4.0 gal
Transmission	34.5 L	9.1 gal
Differentials and final drives:		
Front	26 L	6.9 gal
Rear	25 L	6.6 gal
Hydraulic system (including tank)	148 L	39 gal
Hydraulic tank	70 L	18.5 gal

Engine Torque

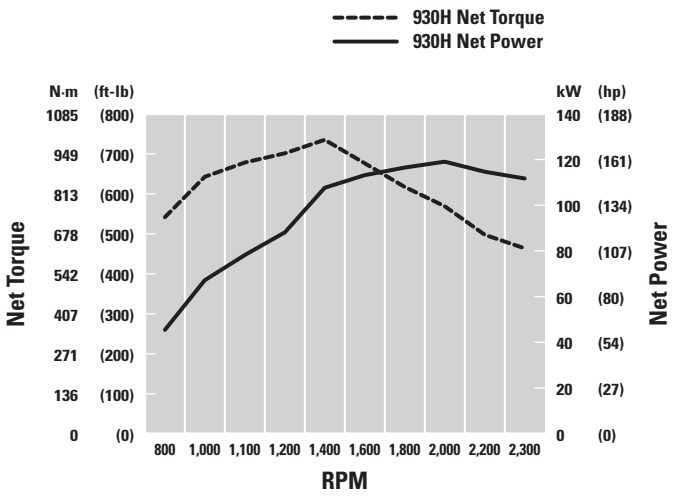

930H Wheel Loader Specifications

Transmission

Standard transmission max travel speeds		38.3 km/h	23.8 mph
Forward	1	7.3 km/h	4.5 mph
	2	12.3 km/h	7.6 mph
	3	24.1 km/h	15 mph
	4	38.3 km/h	23.8 mph
Reverse	1	7.3 km/h	4.5 mph
	2	12.3 km/h	7.6 mph
	3	24.1 km/h	15 mph

Tires

Size	20.5 R25 L3 XHA	
Tread width	2570 mm	8 ft 5 in

- Choice of:
  - 17.5-25, 12PR (L-2)
  - 17.5-25, 12PR (L-3)
  - 17.5 R25, radial (L-2)
  - 17.5 R25, radial (L-3)
  - 20.5-25, 12PR (L-2)
  - 20.5-25, 12PR (L-3)
  - 20.5 R25, radial (L-2/L-3)
  - 600/65 R25, radial (L-3)
- Other tire choices are available, contact your Cat® Dealer for details.
- In certain applications, the loader's productive capabilities may exceed the tire's tonnes-km/h (ton-mph) capabilities. Caterpillar recommends that you consult a tire supplier to evaluate all conditions before selecting a tire model.

Cab

ROPS	SAE J1040 MAY94, ISO 3471-1994
FOPS	SAE J/ISO 3449 APR98 Level II, ISO 3449 1992 Level II

- Caterpillar cab and Rollover Protective Structure (ROPS) are standard in North America and Europe.
- When properly installed and maintained, the cab offered by Caterpillar, when tested with doors and windows closed as per work cycle procedures specified in ANSI/SAE J1166 May 90, results in operator sound exposure Leq (equivalent sound pressure level) of 74 dB(A).

Operating Specifications

Static tipping load (full turn)	8310 kg	18,321 lb
Reach – full lift/ 45 degree dump angle	1070 mm	3 ft 6 in
Dump clearance – full lift/45 degree dump angle	2927 mm	9 ft 7 in
Articulation angle	40°	40°

Dimensions with Bucket

All dimensions are approximate. Dimensions may vary with bucket. Refer to Operating Specifications.

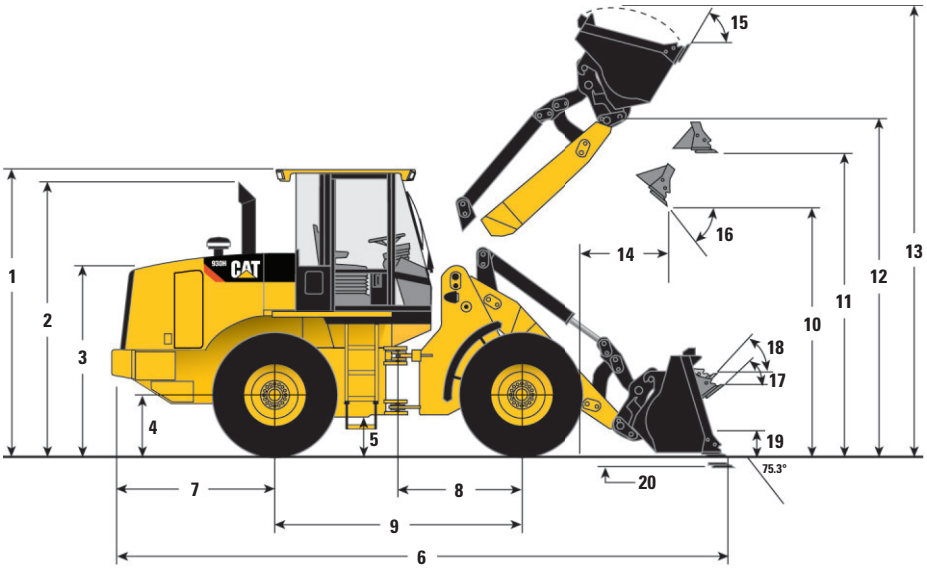

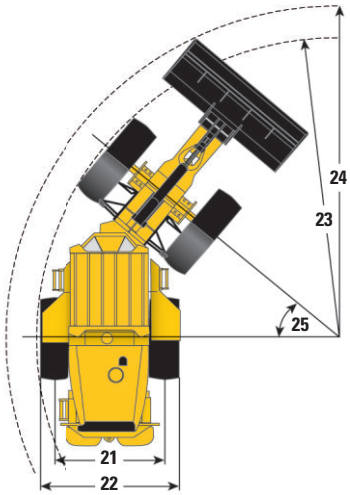

		Standard VersaLink		High Lift VersaLink	
1	Height to top of ROPS/FOPS	3278 mm	(10 ft 9 in)	3278 mm	(10 ft 9 in)
2	Height to top of exhaust stack	3205 mm	(10 ft 6 in)	3205 mm	(10 ft 6 in)
3	Height to top of hood	2234 mm	(7 ft 4 in)	2234 mm	(7 ft 4 in)
4	Height to center of axle	685 mm	(2 ft 3 in)	685 mm	(2 ft 3 in)
5	Ground clearance	411 mm	(1 ft 4 in)	411 mm	(1 ft 4 in)
6	Overall length	7601 mm	(24 ft 11 in)	8080 mm	(26 ft 6 in)
7	Length – rear axle to bumper	1988 mm	(6 ft 6 in)	1988 mm	(6 ft 6 in)
8	Center line of front axle to hitch	1450 mm	(4 ft 9 in)	1450 mm	(4 ft 9 in)
9	Wheel base length	2900 mm	(9 ft 6 in)	2900 mm	(9 ft 6 in)
10	Dump clearance at maximum lift and 45° dump	2833 mm	(9 ft 4 in)	3333 mm	(10 ft 11 in)
11	Bucket clearance at maximum lift and level	3667 mm	(12 ft 0 in)	4169 mm	(13 ft 8 in)
12	Bucket pin height at maximum lift	4049 mm	(13 ft 3 in)	4549 mm	(14 ft 11 in)
13	Overall height – bucket raised	5303 mm	(17 ft 5 in)	5803 mm	(19 ft 0 in)
14	Reach at maximum lift and 45° dump	934 mm	(3 ft 1 in)	934 mm	(3 ft 1 in)
15	Rack back angle at maximum lift	60°		62°	
16	Dump angle at maximum lift	45°		45°	
17	Rack back angle at ground	51°		52°	
18	Rack back angle at carry	53°		57°	
19	Carry height	428 mm	(1 ft 5 in)	577 mm	(1 ft 11 in)
20	Digging depth	201 mm	(8 in)	216 mm	(9 in)

Dimensions listed are for 930H with 2.1 m^3 (2.7 yd^3) hook-on bucket with bolt-on cutting edge, cab with A/C, optional counterweight, limited slip axles, heavy duty rear brakes, additional guarding, sound suppression, 80 kg (176 lb) operator and Michelin 20.5 R25 L3 XHA tires.

		20.5 R25 (L-3) Tires		20.5-25 12PR (L-2) Tires		17.5-25 12PR L-2 Tires	
21	Width at tread center	1950 mm	(6 ft 5 in)	1950 mm	(6 ft 5 in)	1950 mm	(6 ft 5 in)
22	Overall width over tires	2570 mm	(8 ft 5 in)	2504 mm	(8 ft 3 in)	2407 mm	(7 ft 11 in)
23	Minimum turning radius over tires	5275 mm	(17 ft 4 in)	5236 mm	(17 ft 2 in)	5186 mm	(17 ft 0 in)
24	Minimum turning radius over bucket at ground level	5918 mm	(19 ft 5 in)	5910 mm	(19 ft 5 in)	5933 mm	(19 ft 6 in)
25	Steering angle – left/right	40°		40°		40°	
	Change in vertical dimension	no change	no change	+21 mm	(+0.4 in)	–44 mm	(–2 in)

930H Wheel Loader Specifications

Dimensions with Pallet Forks

All dimensions are approximate. Dimensions vary with fork length. Refer to Operating Specifications chart below.

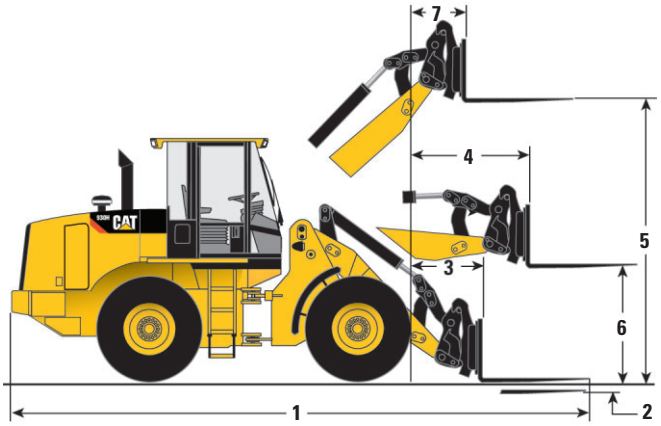

	Standard VersaLink					
	Fork Tine Length					
	1220 mm	(4 ft 0 in)	1370 mm	(4 ft 6 in)	1524 mm	(5 ft 0 in)
1	7854 mm	(25 ft 9 in)	8019 mm	(26 ft 4 in)	8158 mm	(26 ft 10 in)
2	–28 mm	(–1.1 in)	–28 mm	(–1.1 in)	–28 mm	(–1.1 in)
3	994 mm	(3 ft 3 in)	1010 mm	(3 ft 4 in)	994 mm	(3 ft 3 in)
4	1693 mm	(5 ft 7 in)	1708 mm	(5 ft 7 in)	1693 mm	(5 ft 7 in)
5	3889 mm	(12 ft 9 in)	3903 mm	(12 ft 10 in)	3889 mm	(12 ft 9 in)
6	1861 mm	(6 ft 1 in)	1875 mm	(6 ft 2 in)	1861 mm	(6 ft 1 in)
7	772 mm	(2 ft 6 in)	787 mm	(2 ft 7 in)	772 mm	(2 ft 6 in)
	High Lift VersaLink					
1	8360 mm	(27 ft 5 in)	8525 mm	(28 ft)	8664 mm	(28 ft 6 in)
2	–43 mm	(–1.7 in)	–43 mm	(–1.7 in)	–43 mm	(–1.7 in)
3	1500 mm	(4 ft 11 in)	1516 mm	(5 ft)	1500 mm	(5 ft)
4	2086 mm	(6 ft 10 in)	2101 mm	(6 ft 11 in)	2086 mm	(6 ft 10 in)
5	4389 mm	(14 ft 5 in)	4403 mm	(14 ft 5 in)	4389 mm	(14 ft 5 in)
6	1861 mm	(6 ft 1 in)	1875 mm	(6 ft 2 in)	1861 mm	(6 ft 1 in)
7	772 mm	(2 ft 6 in)	787 mm	(2 ft 7 in)	772 mm	(2 ft 6 in)

Operating Specifications with Pallet Forks

	Fork Tine Length					
Standard VersaLink	**1220 mm**	**(4 ft 0 in)**	**1370 mm**	**(4 ft 6 in)**	**1524 mm**	**(5 ft 0 in)**
Operating load:						
Per SAE J1197 FEB91 (50% of FTSTL)	3179 kg	(7,007 lb)	3058 kg	(6,742 lb)	2895 kg	(6,581 lb)
Per EN 474-3, rough terrain (60% of FTSTL)	3827 kg	(8,437 lb)	3772 kg	(8,315 lb)	3773 kg	(8,318 lb)
Per EN 474-3, firm & level ground (80% of FTSTL)	5102 kg	(11,249 lb)	5029 kg	(11,087 lb)	5030 kg	(11,090 lb)
Load center:						
Per SAE J1197	610 mm	(24 in)	685 mm	(27 in)	762 mm	(30 in)
Per EN 474-3	600 mm	(23.6 in)	600 mm	(23.6 in)	600 mm	(23.6 in)
Static tipping load with level arms and forks, straight*	7247 kg	(15,977 lb)	6980 kg	(15,388 lb)	6817 kg	(15,029 lb)
Static tipping load with level arms and forks, full 40° turn*	6357 kg	(14,015 lb)	6116 kg	(13,484 lb)	5970 kg	(13,162 lb)
Operating weight*	12 580 kg	(27,734 lb)	12 648 kg	(27,884 lb)	12 670 kg	(27,933 lb)
High Lift VersaLink						
Operating load:						
Per SAE J1197 FEB91 (50% of FTSTL)	2739 kg	(6,038 lb)	2639 kg	(5,818 lb)	2580 kg	(5,688 lb)
Per EN 474-3, rough terrain (60% of FTSTL)	3296 kg	(7,266 lb)	3245 kg	(7,154 lb)	3242 kg	(7,147 lb)
Per EN 474-3, firm & level ground (80% of FTSTL)	4394 kg	(9,688 lb)	4326 kg	(9,538 lb)	4322 kg	(9,529 lb)
Load center:						
Per SAE J1197	610 mm	(24 in)	685 mm	(27 in)	762 mm	(30 in)
Per EN 474-3	600 mm	(23.6 in)	600 mm	(23.6 in)	600 mm	(23.6 in)
Static tipping load with level arms and forks, straight*	6265 kg	(13,812 lb)	6045 kg	(13,327 lb)	5914 kg	(13,038 lb)
Static tipping load with level arms and forks, full 40° turn*	5477 kg	(12,075 lb)	5278 kg	(11,636 lb)	5160 kg	(11,376 lb)
Operating weight*	12 728 kg	(28,061 lb)	12 796 kg	(28,210 lb)	12 818 kg	(28,259 lb)

* Static tipping and operating weights shown are for 930H with cab with A/C, optional counterweight, limited slip axles, heavy duty rear brakes, additional guarding, sound suppression, work tool, 80 kg (176 lb) operator and Michelin 20.5 R25 L3 XHA tires. Tipping load is defined by SAE J732 JUN92.

Standard VersaLink

Operating Specifications with Bucket

			Coupler Buckets Bolt-On Cutting Edge			Pin-On Buckets Bolt-On Cutting Edge		
	Rated bucket capacity (§)	m^3	2.1	**2.3**	2.5	2.1	**2.3**	2.5
		yd^3	2.7	**3.0**	3.3	2.7	**3.0**	3.3
	Struck capacity (§)	m^3	1.7	**1.9**	2.1	1.7	**1.9**	2.1
		yd^3	2.2	**2.5**	2.7	2.2	**2.5**	2.7
	Bucket width	mm	2550	**2550**	2550	2550	**2550**	2550
		ft/in	8'4"	**8'4"**	8'4"	8'4"	**8'4"**	8'4"
10	Dump clearance at full lift and 45° discharge (§)	mm	2927	**2773**	2727	3017	**2907**	2861
		ft/in	9'7"	**9'1"**	8'11"	9'11"	**9'6"**	9'5"
14	Reach at full lift and 45° discharge (§)	mm	1070	**995**	1040	966	**923**	969
		ft/in	3'6"	**3'3"**	3'5"	3'2"	**3'0"**	3'2"
	Reach at 45° discharge and 2130 mm (7'0") clearance (§)	mm	1693	**1531**	1549	1663	**1535**	1556
		ft/in	5'7"	**5'0"**	5'1"	5'4"	**5'0"**	5'1"
	Reach with lift arms horizontal and bucket level	mm	2523	**2601**	2666	2385	**2456**	2521
		ft/in	8'3"	**8'6"**	8'9"	7'10"	**8'1"**	8'3"
20	Digging depth (§)	mm	152	**201**	201	150	**157**	157
		in	6"	**7.9"**	7.9"	5.9"	**6.2"**	6.2"
6	Overall length	mm	7570	**7686**	7751	7430	**7507**	7572
		ft/in	24'10"	**25'3"**	25'5"	24'5"	**24'8"**	24'10"
13	Overall height with bucket at full raise (§)	mm	5362	**5383**	5470	5263	**5288**	5354
		ft/in	17'7"	**17'8"**	17'11"	17'3"	**17'4"**	17'7"
24	Loader clearance radius with bucket in carry position (§)	mm	5811	**5848**	5865	5760	**5781**	5798
		ft/in	19'1"	**19'2"**	19'3"	18'11"	**19'0"**	19'0"
	Static tipping load straight (§)	kg	9520	**9042**	8951	10 007	**9716**	9623
		lb	20,988	**19,933**	19,733	22,061	**21,421**	21,214
	Static tipping load full 40° turn (§)	kg	8310	**7871**	7785	8755	**8485**	8398
		lb	18,321	**17,352**	17,164	19,302	**18,707**	18,514
	Breakout force (§)	kg	13 727	**12 852**	12 199	15 580	**14 548**	13 741
		lb	30,263	**28,334**	26,894	34,348	**32,073**	30,294
	Operating weight	kg	13 016	**13 174**	13 221	12 848	**12 970**	13 011
		lb	28,696	**29,044**	29,147	28,325	**28,594**	28,684

Static tipping and operating weights shown are for 930H with cab with A/C, optional counterweight, limited slip axles, heavy duty rear brakes, additional guarding, sound suppression, work tool, 80 kg (176 lb) operator and Michelin 20.5 R25 L3 XHA tires.

(§) Specifications and ratings conform to all applicable standards recommended by the Society of Automotive Engineers (SAE), including SAE-Standards J732 JUN92 and J742 FEB85 governing ratings.

Other Ground Engaging Tools available, consult your Cat dealer.

930H Wheel Loader Specifications

High Lift VersaLink

Operating Specifications with Bucket

			Coupler Buckets Bolt-On Cutting Edge			Pin-On Buckets Bolt-On Cutting Edge
	Rated bucket capacity (§)	m^3	2.3	2.8	3.1	2.8
		yd^3	3.0	3.7	4.1	3.7
	Struck capacity (§)	m^3	1.9	2.3	2.6	2.3
		yd^3	2.5	3.0	3.4	3.0
	Bucket width	mm	2550	2550	2550	2550
		ft/in	8'4"	8'4"	8'4"	8'4"
10	Dump clearance at full lift and 45° discharge (§)	mm	3273	3290	3246	3380
		ft/in	10'9"	10'10"	10'8"	11'1"
14	Reach at full lift and 45° discharge (§)	mm	994	1208	1250	1103
		ft/in	3'3"	4'0"	4'1"	3'7"
	Reach at 45° discharge and 2130 mm (7'0") clearance (§)	mm	1980	2203	2222	2140
		ft/in	6'6"	7'3"	7'3"	7'0"
	Reach with lift arms horizontal and bucket level	mm	2995	3110	3170	2972
		ft/in	9'10"	10'2"	10'5"	9'9"
20	Digging depth (§)	mm	216	184	191	182
		in	8.5"	7.2"	7.5"	7.2"
6	Overall length	mm	8165	8259	8324	8120
		ft/in	26'9"	27'1"	27'4"	26'8"
13	Overall height with bucket at full raise (§)	mm	5883	5995	6052	5820
		ft/in	19'4"	19'8"	19'10"	19'1"
24	Loader clearance radius with bucket in carry position (§)	mm	6105	6124	6147	6075
		ft/in	20'0"	20'1"	20'2"	19'11"
	Static tipping load straight (§)	kg	7190	7338	7261	7712
		lb	15,852	16,177	16,009	17,003
	Static tipping load full 40° turn (§)	kg	6221	6357	6283	6700
		lb	13,715	14,014	13,852	14,771
	Breakout force (§)	kg	12 852	11 792	11 270	13 154
		lb	28,334	25,997	24,846	29,000
	Operating weight	kg	13 322	13 268	13 319	13 116
		lb	29,370	29,251	29,364	28,916

Static tipping and operating weights shown are for 930H with cab with A/C, optional counterweight, limited slip axles, heavy duty rear brakes, additional guarding, sound suppression, work tool, 80 kg (176 lb) operator and Michelin 20.5 R25 L3 XHA tires.

(§) Specifications and ratings conform to all applicable standards recommended by the Society of Automotive Engineers (SAE), including SAE-Standards J732 JUN92 and J742 FEB85 governing ratings.

Other Ground Engaging Tools available, consult your Cat dealer.

Supplemental Specifications

	Change in Operating Weight		Change in Articulated Static Tipping Load with Hook-On Bucket	
	kg	lb	kg	lb
Canopy, ROPS (less cab)	–218	–480	–149	–328
Without optional counterweights (470 kg/1,034 lb)	–470	–1,034	–658	–1,448
Without guard, crankcase	–16	–35	–20	–44
Without guard, driveshaft	–17	–37	–12	–26
Without guard, power train	–58	–128	–49	–108
Without ride control system	–45	–99	–24	–53
Without secondary steering	–17	–37	–20	–44
Tires, 1-piece rims				
17.5-25, 12PR (L-2)	–652	–1,434	–365	–803
17.5-25, 12PR (L-3)	–580	–1,276	–325	–715
17.5-25, radial (L-2)	–612	–1,346	–343	–755
17.5-25, radial (L-3)	–512	–1,126	–287	–631
Tires, 3-piece rims				
17.5-25, 12PR (L-2)	–528	–1,162	–296	–651
17.5-25, 12PR (L-3)	–456	–1,003	–255	–561
17.5-25, radial (L-2)	–488	–1,074	–273	–601
17.5-25, radial (L-3)	–388	–854	–217	–477
20.5-25, 12PR (L-2)	–240	–528	–134	–295
20.5-25, 12PR (L-3)	–36	–79	–20	–44
20.5-25, radial (L-2)	–172	–378	–96	–211
20.5-25, radial (L-3)	0	0	0	0
600/65R25, radial (L-3) Michelin	4	9	2	4

930H Wheel Loader Specifications

Typical Material Densities – Loose

	kg/m³	lb/yd³
Basalt	1960	3,305
Bauxite, Kaolin	1420	2,394
Clay		
natural bed	1660	2,799
dry	1480	2,495
wet	1660	2,799
Clay and gravel		
dry	1420	2,394
wet	1540	2,596
Decomposed rock		
75% rock, 25% earth	1960	3,305
50% rock, 50% earth	1720	2,900
25% rock, 75% earth	1570	2,647
Earth		
dry, packed	1510	2,546
wet, excavated	1600	2,698
Granite		
broken	1660	2,799
Gravel		
pitrun	1930	3,254
dry	1510	2,546
dry, 6-50 mm (0.2-2")	1690	2,849
wet, 6-50 mm (0.2-2")	2020	3,406

	kg/m³	lb/yd³
Gypsum		
broken	1810	3,052
crushed	1600	2,698
Limestone		
broken	1540	2,596
crushed	1540	2,596
Sand		
dry, loose	1420	2,394
damp	1690	2,849
wet	1840	3,102
Sand and clay		
loose	1600	2,698
Sand and gravel		
dry	1720	2,900
wet	2020	3,416
Sandstone	1510	2,546
Shale	1250	2,107
Slag		
broken	1750	2,950
Stone		
crushed	1600	2,698

Bucket Selection – Coupler Buckets

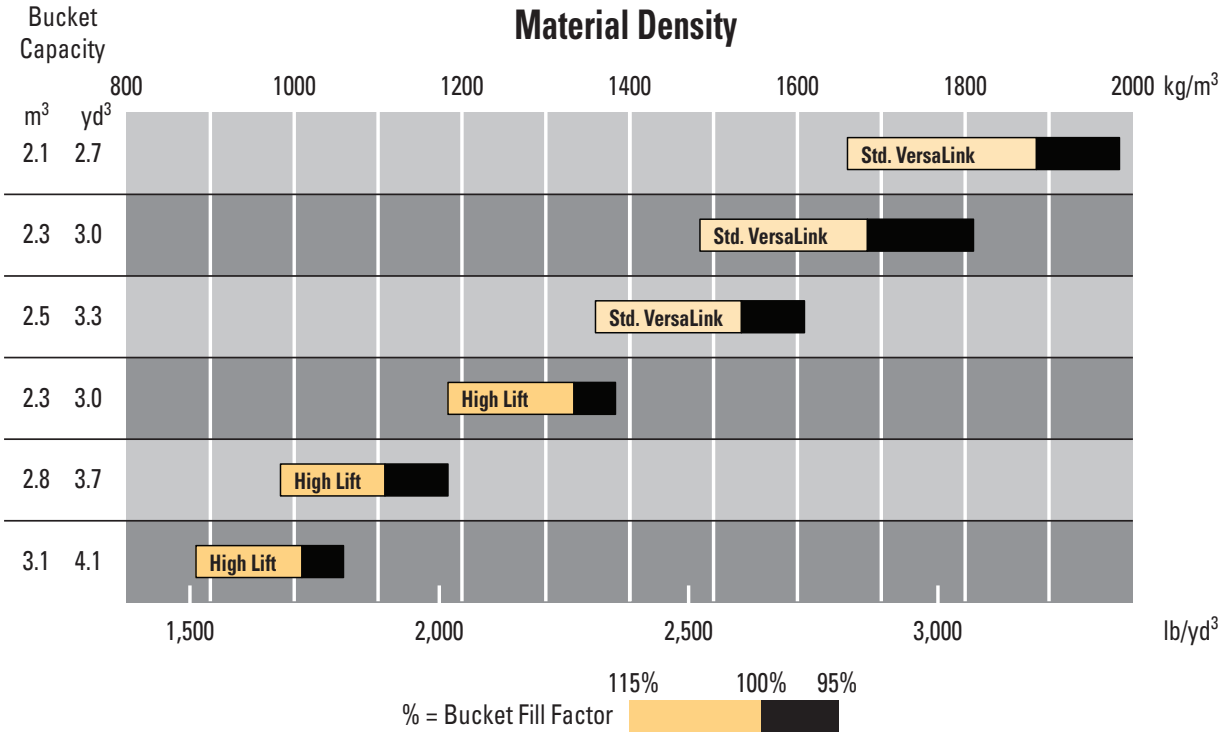

Standard equipment may vary. Consult your Caterpillar dealer for details.

ELECTRICAL

Alternator, 95-amp brushless

Alarm, back-up

Batteries, maintenance-free, 950 CCA, (2)

Directional signals (front & rear)

Starting and charging system, 24V

Halogen work lights (front & rear)

Ignition key start/stop switch

Roading lights

Starting aid, thermal

Switch, battery disconnect

OPERATOR ENVIRONMENT

Standard two door cab includes all of the following items:

Air conditioner, heater/defroster

Sliding glass door windows

Radio ready

12 volt electrical accessory outlet

Sealed Instrument Gauge:

- Engine RPM
- Hydraulic oil temperature
- Engine coolant temperature
- Torque converter oil temperature
- Fuel level
- Digital LED speedometer, hour meter/ odometer

Indicator Lights:

- Turn signal
- Primary steering malfunction
- Hydraulic oil bypass
- Parking brake applied
- Brake charge pressure low
- Transmission oil temperature
- General warning
- Electrical system voltage low
- Fuel water separator
- Engine oil temperature
- Bright lights activated

Adjustable tilt steering column

Coat hook

Ground level door release

Horn, steering wheel mounted (electric)

Hydraulic control lever lockout

Interior light

Lighter

Lunch box storage with cup holder

Pilot hydraulic implement controls

Rear window defroster, electric

Rear view mirrors (2 inside)

Seat, adjustable suspension, armrest (fabric or vinyl)

Seat belt, 75 mm (3 in), retractable

Tinted safety glass, front

Tool box

Wet arm wiper/washer (front & rear), front intermittent

POWER TRAIN

Engine, Cat C6.6 ACERT

- Low emission diesel engine
- Noise reduction technology
- Smart waste gate turbocharged
- Aftercooled
- Closed Circuit Breather
- Electronically controlled

Air cleaner, dry type

Axle seal guards, integrated

Brakes, enclosed wet-disc full hydraulic

Differentials, conventional (front/rear)

Driveshaft, lubed for life

Electric fuel prime pump

Engine speed control

Fuel/water separator

Muffler

Radiator, unit serviceable

S•O•S oil sampling port, engine oil

S•O•S oil sampling port, transmission oil

Torque converter

Transmission, 4F/3R, autoshift, single lever control with F/N/R and kickdown button

Transmission neutralizer; operator programmable

HYDRAULICS

Hydraulic diagnostic connectors

Heavy duty hydraulic oil cooler

Hydraulic control, 3-valve, 2-lever with F/N/R

Hydraulics, third function

Load-sensing hydraulic system

Load-sensing steering system

S•O•S℠ oil sampling port, hydraulic oil

OTHER STANDARD EQUIPMENT

Antifreeze/coolant, extended-life protects to –36° C (–33° F)

Automatic bucket positioner/fork positioner

Brakes, secondary and parking

Counterweight

Coupler controls and lines

Engine enclosure, lockable

Fenders, front

Hitch, recovery

Loader linkage, VersaLink

Lift kickout, automatic

Machine Security System ready

Product Link ready

Remote grease lines

Steering stops, cushioned

Swing-out, hydraulically driven demand fan

Vandalism protection, lockable service points

Visual indicators:

- air cleaner service
- coolant level
- hydraulic oil
- transmission oil

930H Optional Equipment

Optional equipment may vary. Consult your Caterpillar dealer for details.

Antifreeze/coolant, extended-life, protects to –50° C (–58° F)

Axles:

- Front Limited Slip Differential
- Rear Limited Slip Differential
- Rear Limited Slip Differential, with heavy duty brakes (axle oil cooler included)

Beacon light, rotating or strobe, magnetic-mount

Buckets/ground engaging tools

Canopy, ROPS

Counterweight, additional, optional

Deluxe Cab arrangement includes:

- External heated mirrors
- Sunscreen
- Sun shade
- Flood lights, auxiliary, cab mounted

Fan, reversing

Fenders, roading, rear

Fenders, steel

Guards:

- Crankcase
- Driveshaft, front
- Power train
- Lights
- Windshield
- Radiator

Hydraulic control auxiliary; third, fourth, fifth and sixth valve

Integrated third function hydraulic joystick control

Linkage, high lift

Load check valves (dealer installed)

Machine Security System

Material handling arm

Pallet forks, carriage

Pallet forks, carriage, wide version

Product Link

Quick Coupler, IT style

Radiator, wide fin spacing, 5.5 fpi

Radio packages:

- Radio, AM/FM
- Radio, AM/FM with CD player

Rear-view camera system

Ride Control System

Seats:

- Cat Contour Seat, fabric, with adjustable backrest and lumbar support
- Cat Contour Seat, fabric, electrically adjustable with air suspension

Sound suppression package, available in select markets

Starting aid, engine coolant heater, 120V

Steering:

- Secondary
- Dual Mode

Tires:

- Bias ply, 17.5-25 and 20.5-25
- Radial, 17.5-R25, 20.5-R25 and 600/65 R25

Notes

930H Wheel Loader

For more complete information on Cat products, dealer services, and industry solutions, visit us on the web at **www.cat.com**

© 2007 Caterpillar Inc.
All rights reserved
Printed in the U.S.A.

AEHQ5905 (08-2007)
Replaces AEHQ5610-01

Materials and specifications are subject to change without notice. Featured machines may include additional equipment. See your Caterpillar dealer for available options.

CAT, CATERPILLAR, their respective logos, “Caterpillar Yellow” and the POWER EDGE trade dress, as well as corporate and product identity used herein, are trademarks of Caterpillar and may not be used without permission.

CATERPILLAR®